DRW171461AB

Autonics

LCD Display Counter/Timer
CX SERIES
INSTRUCTION MANUAL

CE

CX6S Series　　CX6M Series

Thank you for choosing our Autonics product.
Please read the following safety considerations before use.

■ Safety Considerations

※Please observe all safety considerations for safe and proper product operation to avoid hazards.
※⚠ symbol represents caution due to special circumstances in which hazards may occur.

⚠ Warning Failure to follow these instructions may result in serious injury or death.
⚠ Caution Failure to follow these instructions may result in personal injury or product damage.

⚠ Warning

1. **Fail-safe device must be installed when using the unit with machinery that may cause serious injury or substantial economic loss. (e.g. nuclear power control, medical equipment, ships, vehicles, railways, aircraft, combustion apparatus, safety equipment, crime/disaster prevention devices, etc.)**
   Failure to follow this instruction may result in fire, personal injury, or economic loss.
2. **Install on a device panel to use.**
   Failure to follow this instruction may result in electric shock or fire.
3. **Do not connect, repair, or inspect the unit while connected to a power source.**
   Failure to follow this instruction may result in electric shock or fire.
4. **Check 'Connections' before wiring.**
   Failure to follow this instruction may result in fire.
5. **Do not disassemble or modify the unit.**
   Failure to follow this instruction may result in electric shock or fire.

⚠ Caution

1. **When connecting the power input and relay output, use AWG 20 (0.50mm²) cable or over, and tighten the terminal screw with a tightening torque of 0.74 to 0.90N·m.**
   Failure to follow this instruction may result in fire or malfunction due to contact failure.
2. **Use the unit within the rated specifications.**
   Failure to follow this instruction may result in fire or product damage.
3. **Use the unit within the rated specifications.**
   Failure to follow this instruction may result in shortening the life cycle of the unit, or fire.
4. **Do not use the unit in the place where flammable/explosive/corrosive gas, humidity, direct sunlight, radiant heat, vibration, impact, or salinity may be present.**
   Failure to follow this instruction may result in fire or explosion.
5. **Keep metal chip, dust, and wire residue from flowing into the unit.**
   Failure to follow this instruction may result in fire or product damage.

■ Manual

For the detail information and instructions, please refer to user manual and be sure to follow cautions. Visit our homepage (www.autonics.com) to download manuals.

■ Ordering Information

CX 6 S - 1P 4 F

Item	Code	Description
Signal input method	No mark	Voltage input (PNP) /no-voltage input (NPN) selectable type
	F	Free voltage input
Power supply	2	24VAC 50/60Hz, 24-48VDC
	4	100-240VAC 50/60Hz
Output	1P	1-stage setting
	2P	2-stage setting
Size	S	DIN W48×H48mm
	M	DIN W72×H72mm
Display digit	6	999999 (6-digit)
Item	CX	LCD Display Counter/Timer

■ Unit Description

◎ CX6S Series

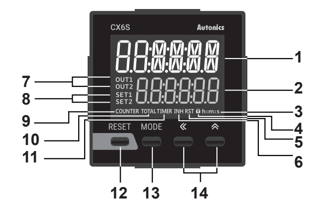

◎ CX6M Series

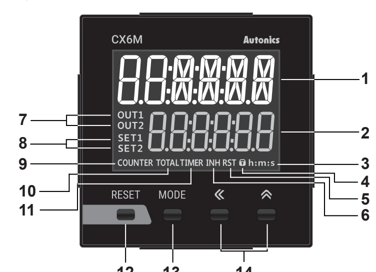

1. **Counting value display component (red)**
   RUN mode
   : Displays counting value for counter operation or time progress value for timer operation.
   Function setting mode: Displays parameter.
2. **Setting value display component (green)**
   RUN mode: Displays setting value.
   Function setting mode: Displays parameter setting value.
3. **Time unit indicator (h:m:s):** Turns ON for time unit for timer.
4. **Key lock indicator (🔒):** Turns ON for key lock setting.
5. **Reset input indicator (RST):** Turns ON for reset key input or reset signal input.
6. **INH indicator (INH)**
   : For the voltage input (PNP)/no-voltage input (NPN) selectable model (CX6□-□□), it turns ON for INHIBIT signal input.
   (In case of CX6S Series and timer mode, it turns ON for INB/INH signal input.)
   For free voltage input model (CX6□-□□F), it turns ON for INB/INH signal input for timer.
7. **Output indicator (OUT1, OUT2):** Turns ON for the dedicated control output ON.
8. **SV checking and changing indicator (SET, SET1, SET2) (green)**
   : Turns ON when checking and changing SV.
9. **COUNTER indicator (COUNTER):** Turns ON for counter operation.
10. **TOTAL indicator※1 (TOTAL)**
    : In case of TOTAL counter display mode, it turns ON with the COUNTER indicator.
11. **TIMER indicator (TIMER)**
    : Flashes (progressing time) or Turns ON (stopping time) for timer operation.
12. **[RESET] key**
    RUN mode, Function setting mode
    : Press the [RESET] key to reset the counting value and turn OFF the output.
    TOTAL counter display mode※1: Press the [RESET] key to reset the counting value of TOTAL counter.
13. **[MODE] key**
    RUN mode: Hold the [MODE] key over 3 sec to enter function setting mode.
    Press the [MODE] key to select SV2 (SET2)/SV1 (SET1)/TOTAL counter※1 display for counter operation.
    Function setting mode: Hold the [MODE] key over 3 sec to return RUN mode.
    Press the [MODE] key to save the SV and enter the next setting.
    Function setting check mode: Hold the [MODE] key over 1 sec to return RUN mode.
    Changing SV mode: Press the [MODE] key to save SV and return RUN mode.
14. **[«], [^] key**
    1) [«] key
    RUN mode: Press the [«] key to change SV and move SV (SET, SET1, SET2) digits.
    Changing SV mode: Press the [«] key to change digits.
    2) [^] key
    Changing SV mode: Increases SV.
    Function setting mode: Changes the settings.

※1: This is for the voltage input (PNP)/no-voltage input (NPN) selectable model (CX6□-□□).

■ Specifications

Item			CX6S-1P□□	CX6S-2P□□	CX6M-1P□□	CX6M-2P□□
Display digits			6-digit			
Display method			7-segment (1st, 2nd digits of counting value display: white, setting value display: green) LCD method, 11-segment (the other digits of counting value display: white) LCD method, Operation display part: yellow LCD method			
Character size (W×H)	Counting value		4.1×10.1mm		6.2×15.2mm	
	Setting value		3.3×8.1mm		5×12.3mm	
Power supply	AC voltage		100-240VAC～ 50/60Hz			
	AC/DC voltage		24VAC～ 50/60Hz, 24-48VDC⎓			
Permissible voltage range			90 to 110% of rated voltage			
Power consumption	AC voltage	CX6□-□□	Max. 6.4VA	Max. 6.7VA	Max. 7.1VA	Max. 7.5VA
		CX6□-□□F	Max. 4.2VA	Max. 4.9VA	Max. 4.7VA	Max. 5.4VA
	AC/DC voltage	CX6□-□□	AC: max. 5.5VA DC: max. 3.5W	AC: max. 5.6VA DC: max. 3.6W	AC: max. 6.2VA DC: max. 4W	AC: max. 6.3VA DC: max. 4.1W
		CX6□-□□F	AC: max. 3.6VA DC: max. 2.5W	AC: max. 4.0VA DC: max. 2.8W	AC: max. 3.9VA DC: max. 2.9W	AC: max. 4.5VA DC: max. 3.3W
Counter	Max. INA/INB counting speed	CX6□-□□	Selectable among 1cps/30cps/300cps/1kcps/5kcps			
		CX6□-□□F	20cps			
	Counting range		-99999 to 999999			
	Scale		Decimal point up to fifth digit			
	Min. signal width	CX6□-□□	RESET, TOTAL RESET signal: selectable among 1ms/20ms			
		CX6□-□□F	RESET signal: 25ms			
Timer	Time range		999.999s, 9999.99s, 99999.9s, 999999s, 99m59.99s, 999m59.9s, 9999m59s, 99999.9m, 999999m, 99h59m59s, 9999h59m, 99999.9h			
	Operation mode		Up, Down			
	Min. signal width	CX6□-□□	INA, INHIBIT, RESET, TOTAL RESET signal: selectable among 1ms/20ms			
		CX6□-□□F	INA, INH, RESET signal: 25ms			
	Repeat error		[CX6□ - □□]-In case of power ON start: max. ±0.01% ±0.05s In case of signal ON start: max. ±0.01% ±0.03s			
	Set error					
	Voltage error		[CX6□ - □□F]-In case of power ON start: max. ±0.01% ±0.08s In case of signal ON start: max. ±0.01% ±0.06s			
	Temp. error					
Input method		CX6□-□□	Selectable among voltage input (PNP)/no-voltage input (NPN) [Voltage input (PNP)]-input impedance: 10.8kΩ, [H]: 5-30VDC⎓, [L]: 0-2VDC [No-voltage input (NPN)]-short-circuit impedance: max. 1kΩ, short-circuit residual voltage: max. 2VDC			
		CX6□-□□F	[Free voltage input]-INA (START) , INB (INHIBIT) input [H]: 24-240VDC⎓/24-240VAC～ 50/60Hz, [L]: 0-10VDC/VAC [No-voltage input]-RESET input, short-circuit impedance: max. 1kΩ, short-circuit residual voltage: max. 2V			
One-shot output time			0.01 to 99.99s setting			
Control output	Contact	Type	SPDT (1c): 1	SPST (1a): 2	SPDT (1c): 1	SPDT (1c): 2
		Capacity	Max. 250VAC～ 3A, 30VDC⎓ 3A resistive load			
	Solid state	Type	—		NPN open collector: 1	NPN open collector: 2
		Capacity			Max. 30VDC⎓ 100mA	
External power supply※1			Max. 12VDC⎓ ±10%, 100mA			
Memory retention			Approx. 10 years (non-volatile memory)			
Insulation resistance			Over 100MΩ (at 500VDC megger)			
Dielectric strength			3,000VAC 50/60Hz for 1 min			
Noise immunity	AC voltage		Square-wave noise by noise simulator (pulse width 1μs) ±2kV			
	AC/DC voltage		Square-wave noise by noise simulator (pulse width 1μs) ±500V			
Vibration	Mechanical		0.75mm amplitude at frequency 10 to 55Hz (for 1 min) in each X, Y, Z direction for 1 hour			
	Malfunction		0.5mm amplitude at frequency 10 to 55Hz (for 1 min) in each X, Y, Z direction for 10 minutes			
Shock	Mechanical		300m/s² (approx. 30G) in each X, Y, Z direction for 3 times			
	Malfunction		100m/s² (approx. 10G) in each X, Y, Z direction for 3 times			
Relay life cycle	Mechanical		Min. 5,000,000 operations			
	Malfunction		Min. 100,000 operations			
Protection structure			Front part: IP50 (IEC standard)			
Environment	Ambient temp.		-10 to 55℃, storage: -25 to 65℃			
	Ambient humi.		35 to 85%RH, storage: 35 to 85%RH			
Approval			CE			
Weight※2	AC voltage	CX6□-□□	Approx. 157g (approx. 112g)	Approx. 162g (approx. 117g)	Approx. 235g (approx. 170g)	Approx. 240g (approx. 175g)
		CX6□-□□F	Approx. 155g (approx. 110g)	Approx. 160g (approx. 115g)	Approx. 233g (approx. 168g)	Approx. 238g (approx. 173g)
	AC/DC voltage	CX6□-□□	Approx. 156g (approx. 111g)	Approx. 161g (approx. 116g)	Approx. 234g (approx. 169g)	Approx. 239g (approx. 174g)
		CX6□-□□F	Approx. 154g (approx. 109g)	Approx. 159g (approx. 114g)	Approx. 232g (approx. 167g)	Approx. 237g (approx. 172g)

※1: This is for the voltage input (PNP)/no-voltage input (NPN) selectable model (CX6□-□□).
※2: The weight includes packaging. The weight in parenthesis is for unit only.
※Environment resistance is rated at no freezing or condensation.
※The above specifications are subject to change and some models may be discontinued without notice.
※Be sure to follow cautions written in the instruction manual, user manual and the technical descriptions (catalog, homepage).

■ Dimensions

(unit: mm)

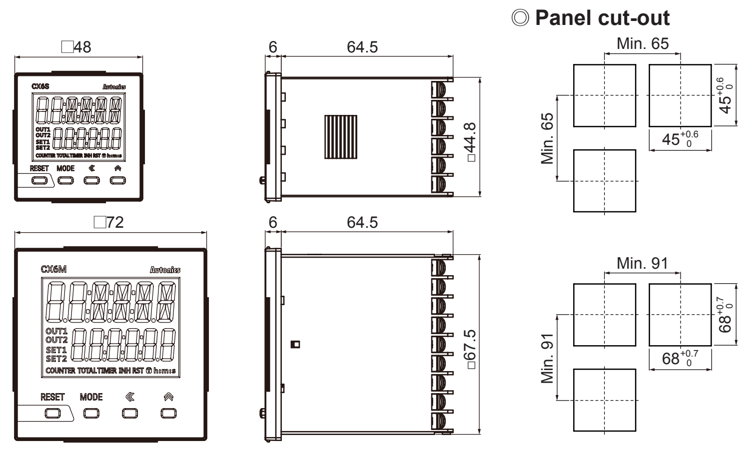

◎ Bracket

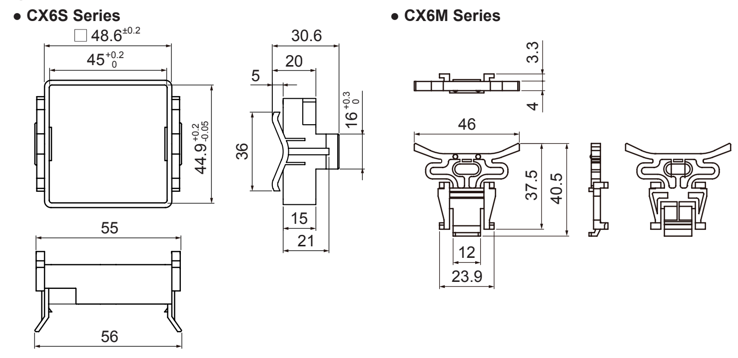

◎ Terminal cover (sold separately)

● CX6S Series (RSA-COVER, 48×48mm)　● CX6M Series (RMA-COVER, 72×72mm)

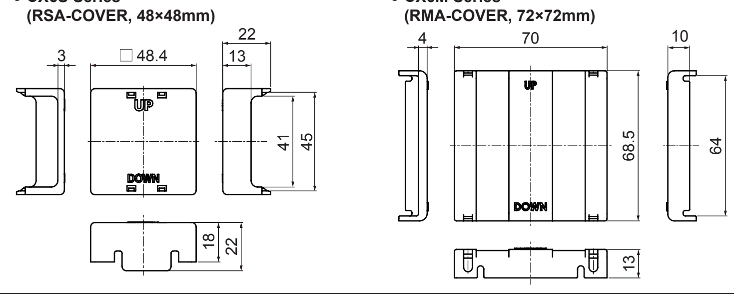

■ Connections

◎ CX6S Series

1. Voltage input (PNP)/no-voltage input (NPN) selectable model

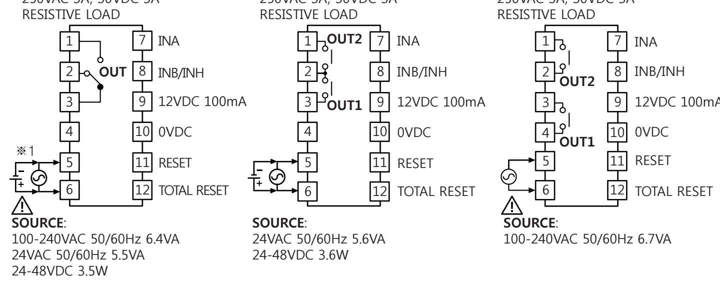

2. Free voltage input model

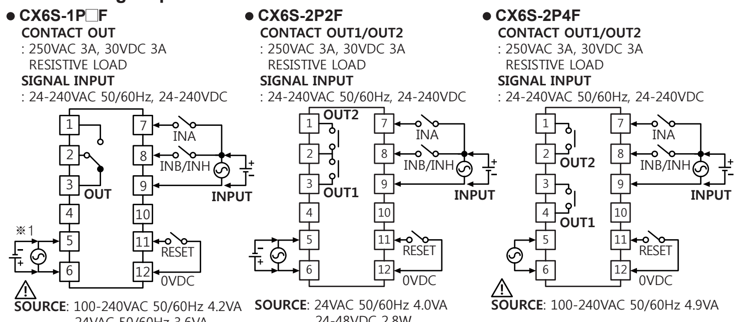

◎ CX6M Series

1. Voltage input (PNP)/no-voltage input (NPN) selectable model

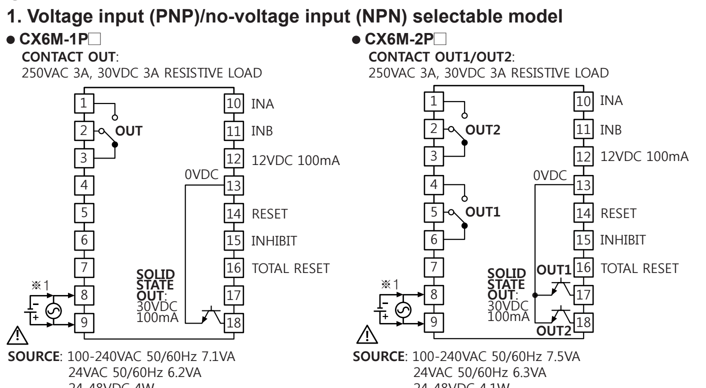

2. Free voltage input model

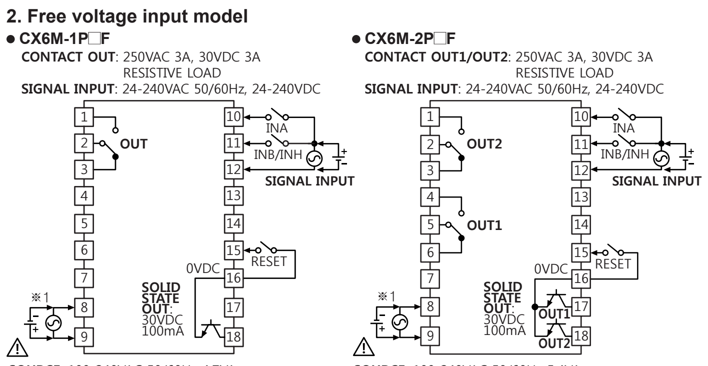

※1: AC voltage: 100-240VAC 50/60Hz
AC/DC voltage: 24VAC 50/60Hz, 24-48VDC

■ Operations

1. Operation and setting (counter/timer)

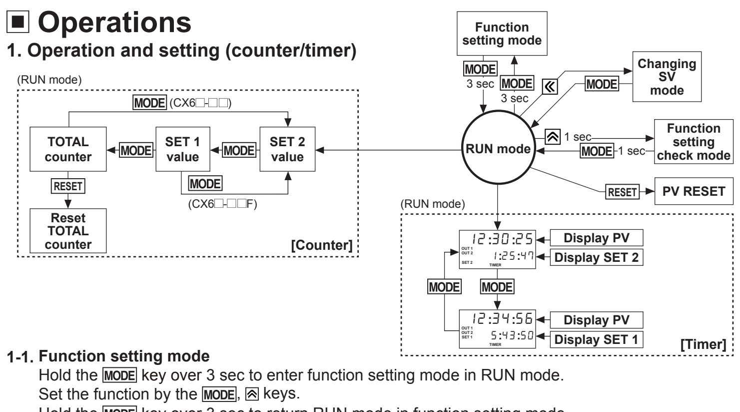

1-1. Function setting mode
Hold the [MODE] key over 3 sec to enter function setting mode in RUN mode.
Set the function by the [MODE], [^] keys.
Hold the [MODE] key over 3 sec to return RUN mode in function setting mode.

1-2. Function setting check mode
Hold the [^] key over 1 sec to enter function setting check mode in RUN mode.
When checking the saved parameters, press the [MODE], [^] key to check next item..
Hold the [MODE] key over 1 sec at function setting check mode and it returns to RUN mode.

1-3. RESET
In RUN mode, function setting mode, press the [RESET] key to reset the current value and the output turns OFF.
At TOTAL counter display mode※1, press the [RESET] key to reset TOTAL counter counting value and the current counting value.

※1: This is for the voltage input (PNP)/no-voltage input (NPN) selectable model (CX6□-□□).
TOTAL counter display mode is only for counter operation.

2. Function setting

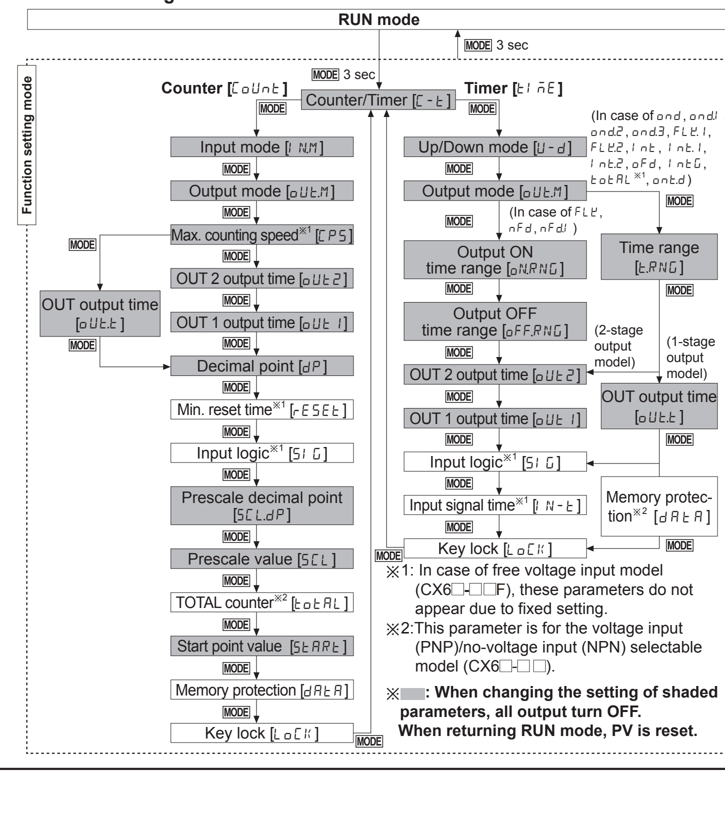

※1: In case of free voltage input model (CX6□-□□F), these parameters do not appear due to fixed setting.
※2: This parameter is for the voltage input (PNP)/no-voltage input (NPN) selectable model (CX6□-□□).
※(shaded): When changing the setting of shaded parameters, all output turn OFF. When returning RUN mode, PV is reset.

■ Counter Mode

1. Parameter setting

([MODE] key: Moves parameters, [^] key: Changes parameter setting value)

Parameter	Parameter setting value
Counter/Timer [C-t]	CoUnt ↔ tiME　※CoUnt: Counter, tiME: Timer
Input mode [iN.M]	UP → UP-1 → UP-2 → UP-3 → dn → dn-1 → dn-2 → dn-3 → Ud-A → Ud-b※1 → Ud-C※1 → UP
Output mode [oUt.M]	• Input mode is UP, UP-1, UP-2, UP-3 or dn, dn-1, dn-2, dn-3, F → n → C → r → K → P → q → A • Input mode is Ud-A, Ud-b※1, Ud-C※1 F → n → C → r → K → P → q → A → S → t → d ※If max. counting speed is 5kcps, and output mode is d, max. counting speed is automatically changed as 30cps, factory default.
Max. counting speed※2 [CPS]	30 → 300 → 1K → 5K → 1 ※Max. counting speed is when duty ratio of INA or INB input signal is 1:1. It is applied for INA, or INB input as same. ※When output mode is d, set max. counting speed one among 1cps, 30cps, 300cps, or 1kcps.
OUT 2 output time※3 [oUt2]	※Set one-shot output time of OUT 2. ※Setting range: 00.01 to 99.99 sec ※When output mode is F, n, S, t, d, this parameter does not appear. (fixed as HOLD)
OUT 1 output time※3 [oUt1]	※Set one-shot output time of OUT 1. ※Setting range: 00.01 to 99.99 sec, Hold ※When number of tens digit is flashing, press the [«] key once and HoLd appears. ※When output mode is S, t, d, this parameter does not appear. (fixed as HOLD)
OUT output time※3 [oUt.t]	※Setting range: 00.01 to 99.99 sec ※When output mode is F, n, S, t, d, this parameter does not appear. (fixed as HOLD)
Decimal point※4 [dP]	------ → -----.- → ----.-- → ---.--- → --.---- → -.----- ※Decimal point is applied to PV and SV.
Min. reset time※2 [rESEt]	1 ↔ 20, unit: ms ※Set min. width of external reset signal input.
Input logic※2 [SiG]	nPn: No-voltage input, PnP: Voltage input
Prescale decimal point※4 [SCL.dP]	-.----- → ------ → -----.- → ----.-- → ---.--- → --.---- ※Decimal point of prescale should not set smaller than decimal point [dP].
Prescale value [SCL]	※Setting range: 0.00001 to 99999.9 ※Setting range of prescale is linked with prescale decimal point [SCL.dP] setting.
TOTAL counter※1 [totAL]	on ↔ oFF
Start point value [StARt]	※Setting range of start point value is linked with decimal point [dP] setting. (0.00000 to 999999) ※When input mode is dn, dn-1, dn-2, this parameter does not appear. ※When total count function is ON, this parameter does not appear.※1
Memory protection [dAtA]	CLr ↔ rEC　※CLr: Resets the counting value when power OFF. rEC: Maintains the counting value when power OFF. (memory protection)
Key lock [LoCK]	L.oFF → LoC.1 → LoC.2 → LoC.3 → L.oFF ※L.oFF: Unlock keys, key lock indicator turns OFF LoC.1: Locks [RESET] key, key lock indicator turns ON LoC.2: Locks [«], [^] keys, key lock indicator turns ON LoC.3: Locks [RESET], [«], [^] keys, key lock indicator turns ON

※1: For voltage input (PNP), no-voltage input (NPN) model (CX6□-□□).
※2: For free voltage input model(CX6□-□□F), these parameters do not appear due to fixed setting.
※3: For 1-stage setting model (CX6□-1P□□), oUt1 does not appear.
The oUt2 output time is displayed as oUt.t.
※4: Decimal point and prescale decimal point
-Decimal point: Set the decimal point for display value regardless of prescale value.
-Prescale decimal point
: Set the decimal point for prescale value of counting value regardless of display value.

2. Input mode

Input mode	Counting chart	Operation
Up [UP]	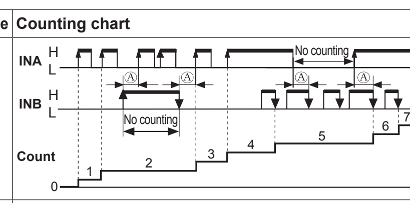	※When INA is counting input, INB is no counting input. When INB is counting input, INA is no counting input.
Up-1 [UP-1]	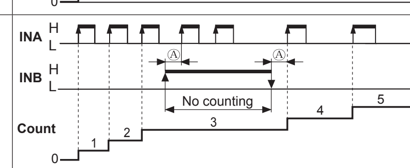	※When INA input signal is rising (_⌐), it counts. ※INA: Counting input ※INB: No counting input
Up-2 [UP-2]	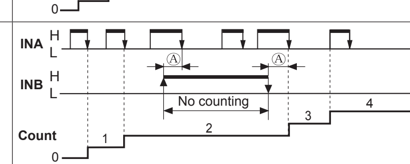	※When INA input signal is falling (¬_), it counts. ※INA: Counting input ※INB: No counting input
Up-3 [UP-3]	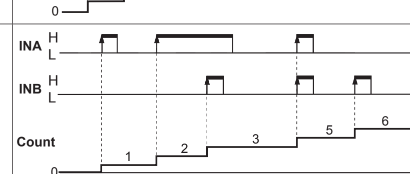	※When INA or INB input signal is rising (_⌐), it counts. ※INA: Counting input ※INB: Counting input
Down [dn]	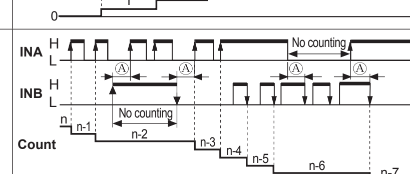	※When INA is counting input, INB is no counting input. When INB is counting input, INA is no counting input.
Down-1 [dn-1]	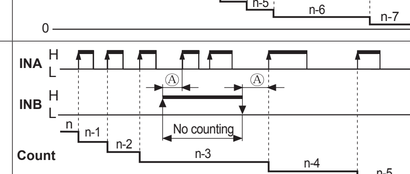	※When INA input signal is rising (_⌐), it counts. ※INA: Counting input ※INB: No counting input
Down-2 [dn-2]	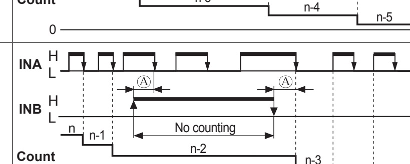	※When INA input signal is falling (¬_), it counts. ※INA: Counting input ※INB: No counting input
Down-3 [dn-3]	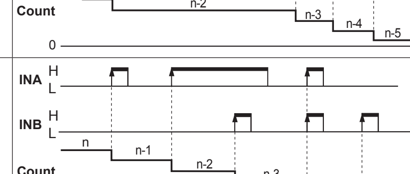	※When INA or INB input signal is rising (_⌐), it counts. ※INA: Counting input ※INB: Counting input
Up/Down-A [Ud-A]	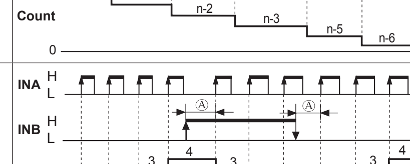	※INA: Counting input INB: Counting command input ※When INB is "L", counting command is up. When INB is "H", counting command is down.
Up/Down-B※1 [Ud-b]	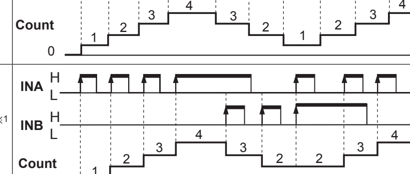	※INA: Up counting input INB: Down counting input ※When INA and INB input signals are rising (_⌐) at the same time, it maintains previous counting value.
Up/Down-C※1 [Ud-C]	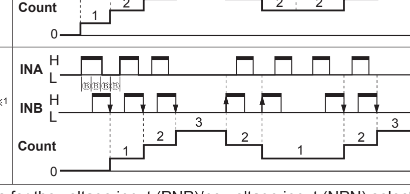	※When connecting encoder output A, B phase with counter input, INA, INB, set input mode [iN.M] as phase different input [Ud-C] for counter operation.

※1: This is for the voltage input (PNP)/no-voltage input (NPN) selectable model (CX6□-□□).
※A: over min. signal width, B: over than 1/2 of min. signal width.
If the signal is smaller than these width, it may cause counting error (±1).

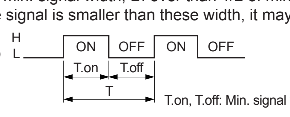

※The meaning of "H", "L"

Character \ Input method	Voltage input (PNP)	No-voltage input (NPN)
H	5-30VDC	Short
L	0-2VDC	Open

※Min. signal width by counting speed

● CX6□-□□

Counting speed	Min. signal width
1cps	500ms
30cps	16.7ms
300cps	1.67ms
1kcps	0.5ms
5kcps	0.1ms

● CX6□-□□F

Counting speed	Min. signal width
20cps	25ms

3. Prescale function

This function is to set and display calculated unit for actual length, liquid, position, etc. It is called "prescale value" for measured length, liquid, or position, etc per 1 pulse. For example, when moving L, the desired length to be measured, and P, the number of pulses per 1 revolution of a rotary encoder, occurs, prescale value is L/P.

E.g.) Positioning control by counter and encoder

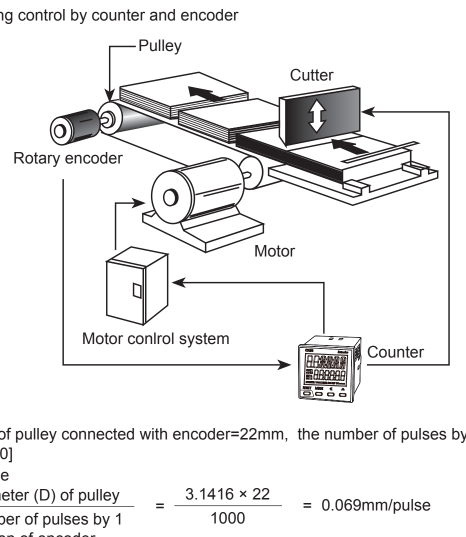

[Diameter (D) of pulley connected with encoder=22mm, the number of pulses by 1 rotation of encoder=1,000]

*Prescale value

$$= \frac{\pi \times \text{Diameter (D) of pulley}}{\text{The number of pulses by 1 rotation of encoder}} = \frac{3.1416 \times 22}{1000} = 0.069\text{mm/pulse}$$

Set decimal point [dP] as [-----.-], prescale decimal point [SCL.dP] as [---.---], and prescale value [SCL] as [0.069] at function setting mode.
It is available to control conveyor position by 0.1mm unit.

■ Timer Mode

1. Parameter setting

([MODE] key: Moves parameters, [^] key: Changes parameter setting value)

Parameter	Parameter setting value
Counter/Timer [C-t]	CoUnt ↔ tiME　※CoUnt: Counter, tiME: Timer
Up/Down mode [U-d]	UP ↔ dn ※UP: Time progresses from '0' to the setting time. dn: Time progresses from the setting time to '0'.
Output mode [oUt.M]	ond → ond.1 → ond.2 → ond.3 → FLK → FLK.1 → FLK.2 → int → int.1 → int.2※2 → oFd → nFd → nFd.1 → intG → totAL※1 → ont.d → ond
Time range [t.RNG]※3	999.999 (s) → 9999.99 (s) → 99999.9 (s) → 999999 (s) → 99:59.99 (m:s) → 999:59.9 (m:s) → 9999:59 (m:s) → 99999.9 (m) → 999999 (m) → 99:59:59 (h:m:s) → 9999:59 (h:m) → 99999.9 (h)
output ON TIME range [oN.RNG]※4, output OFF TIME range [oFF.RNG]※4	(same as time range)
OUT 2 output time※5 [oUt2]	※Set one-shot output time of OUT 2. ※Setting range: 00.01 to 99.99 sec, Hold ※When number of tens digit is flashing, press the [«] key once and HoLd appears.
OUT 1 output time※5 [oUt1]	※Set one-shot output time of OUT 1. ※Setting range: 00.01 to 99.99 sec, Hold ※When number of tens digit is flashing, press the [«] key once and HoLd appears.
OUT output time※5 [oUt.t]	※Setting range: 00.01 to 99.99 sec, Hold ※When number of tens digit is flashing, press the [«] key once and HoLd appears.
Input logic※6 [SiG]	nPn: No-voltage input, PnP: Voltage input
Input signal time※6 [iN-t]	1 ↔ 20, unit: ms ※Set min. width of INA, INHIBIT, RESET, TOTAL RESET signal
Memory protection [dAtA]	CLr ↔ rEC ※CLr: Resets the counting value when power OFF. rEC: Maintains the counting value when power OFF. (memory protection)
Key lock [LoCK]	L.oFF → LoC.1 → LoC.2 → LoC.3 → L.oFF ※L.oFF: Unlock keys, key lock indicator turns OFF LoC.1: Locks [RESET] key, key lock indicator turns ON LoC.2: Locks [«], [^] keys, key lock indicator turns ON LoC.3: Locks [RESET], [«], [^] keys, key lock indicator turns ON

※1: This is for the voltage input (PNP)/no-voltage input (NPN) selectable model (CX6□-□□).
※2: int.2 mode is available only for 2-stage setting model(CX6□-2P□□).
※3: When output mode is ond, ond.1, ond2, ond3, FLK.1, FLK2, int, int.1, int2, oFd, intG, totAL, ont.d, set time range [t.RNG].
※4: When output mode is FLK, nFd, nFd.1, set output ON TIME range [oN.RNG] and output OFF TIME range [oFF.RNG].
※5: In case of 1-stage setting model (CX6□-1P□□), oUt1 output time does not appear.
oUt2 output time is displayed as oUt.t.
※6: In case of free voltage input model (CX6□-□□F), this parameter does not appear due to fixed setting.

2. Timer '0' time setting

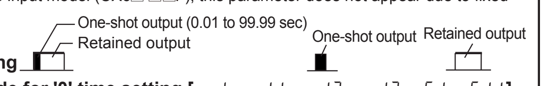

2-1. Timer output mode for '0' time setting [ond, ond.1, ond2, ond3, nFd, nFd.1]

2-2. Operations by output mode ('0' time setting)

A. OND (Signal ON Delay) mode [ond]
• Set '0' for setting time 1.　• Set '0' for setting time 2.

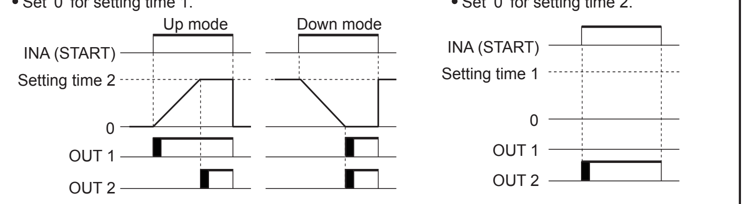

B. OND.1 (Signal ON Delay 1) mode [ond.1]
• Set '0' for setting time 1.　• Set '0' for setting time 2.

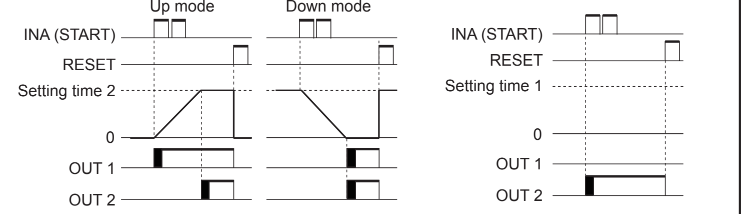

C. OND.2 (Power ON Delay) mode [ond2]
• Set '0' for setting time 1.　• Set '0' for setting time 2.

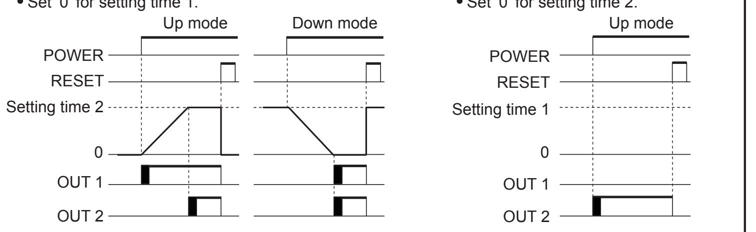

D. OND.3 (Power ON Delay) mode [ond3]
• Set '0' for setting time 1.　• Set '0' for setting time 2.

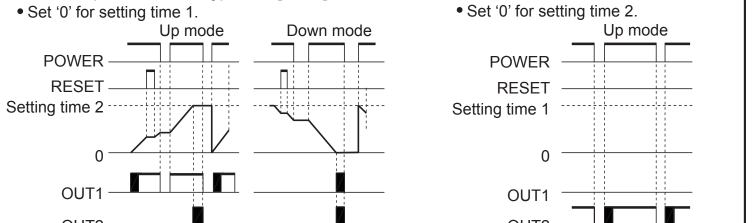

E. NFD (ON-OFF Delay) mode [NFD]
• Set '0' for Off_Delay setting time.　• Set '0' for On_Delay setting time.

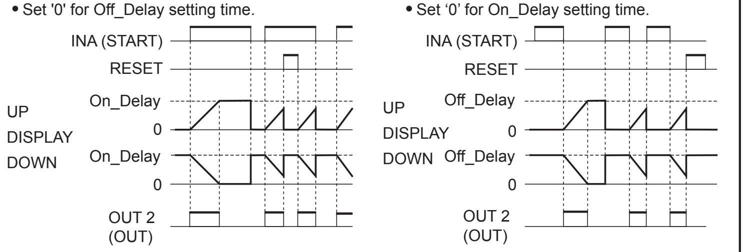

F. NFD.1 (ON-OFF Delay1) mode [nFd.1]
• Set '0' for Off_Delay setting time.　• Set '0' for On_Delay setting time.

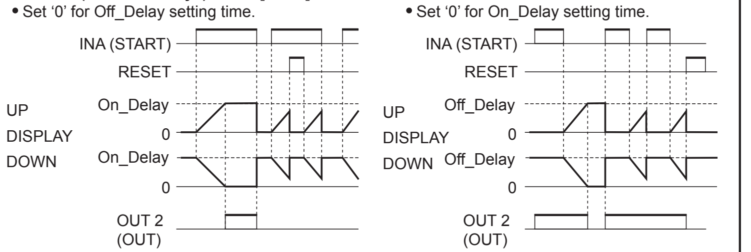

■ Factory Default

	Parameter	CX6□-□□	CX6□-□□F
Counter	iN.M	Ud-C	Ud-A
	oUt.M	F	F
	CPS	30	—
	oUt2 (oUt.t※1)	HoLd (fixed)	HoLd (fixed)
	oUt1※1	00.10	00.10
	dP	------	------
	rESEt	20ms	—
	SiG	nPn	—
	SCL.dP	-.-----	-.-----
	SCL	1.00000	1.00000
	totAL※2	oFF	—
	StARt	000000	000000
	dAtA	CLr	CLr
Timer	U-d	UP	UP
	oUt.M	ond	ond
	oUt2 (oUt.t※1)	HoLd	HoLd
	oUt1※1	00.10	00.10
	t.RNG	999.999s	999.999s
	SiG※2	nPn	—
	iN-t	20ms	—
LoCK		L.oFF	L.oFF
SET1		1000	1000
SET2		5000	5000

※1: For 1-stage setting model (CX6□-1P□□), oUt1 does not appear.
The output time of oUt2 is displayed as oUt.t.
※2: This is for the voltage input (PNP)/no-voltage input (NPN) selectable model (CX6□-□□).

■ Error Display and Output Operation

Error Display	Error description	Troubleshooting
Err0	Setting value is 0.	Change the setting value anything but 0.

※When error occurs, the output turns OFF.
※When 1st setting value is set as 0 (zero), OUT1 maintains OFF.
When 2nd setting value is smaller than 1st setting value, 1st setting value is ignored and only OUT2 output operates.
※Indicator model does not have error display function.

■ Cautions during Use

1. Follow instructions in 'Cautions during Use'. Otherwise, it may cause unexpected accidents.
2. In case of 24-48VDC, 24VAC model, power supply should be insulated and limited voltage/current or Class 2, SELV power supply device.
3. Use the product, 0.1 sec after supplying power.
4. When supplying or turning off the power, use a switch or etc. to avoid chattering.
5. Install a power switch or circuit breaker in the easily accessible place for supplying or disconnecting the power.
6. Keep away from high voltage lines or power lines to prevent inductive noise.
   In case installing power line and input signal line closely, use line filter or varistor at power line and shielded wire at input signal line.
   Do not use near the equipment which generates strong magnetic force or high frequency noise.
7. This unit may be used in the following environments.
   ①Indoors (in the environment condition rated in 'Specifications')
   ②Altitude max. 2,000m
   ③Pollution degree 2
   ④Installation category II

■ Major Products

■ Photoelectric Sensors
■ Fiber Optic Sensors
■ Door Sensors
■ Door Side Sensors
■ Area Sensors
■ Proximity Sensors
■ Pressure Sensors
■ Rotary Encoders
■ Connector/Sockets
■ Switching Mode Power Supplies
■ Control Switches/Lamps/Buzzers
■ I/O Terminal Blocks & Cables
■ Stepper Motors/Drivers/Motion Controllers
■ Graphic/Logic Panels
■ Field Network Devices
■ Laser Marking System (Fiber, CO_2, Nd: YAG)
■ Laser Welding/Cutting System
■ Temperature Controllers
■ Temperature/Humidity Transducers
■ SSR/Power Controllers
■ Counters
■ Timers
■ Panel Meters
■ Tachometer/Pulse (Rate) Meters
■ Display Units
■ Sensor Controllers

Autonics Corporation
http://www.autonics.com
■ HEADQUARTERS:
18, Bansong-ro 513 beon-gil, Haeundae-gu, Busan, South Korea, 48002
TEL: 82-51-519-3232
■ E-mail: sales@autonics.com